部品分解図

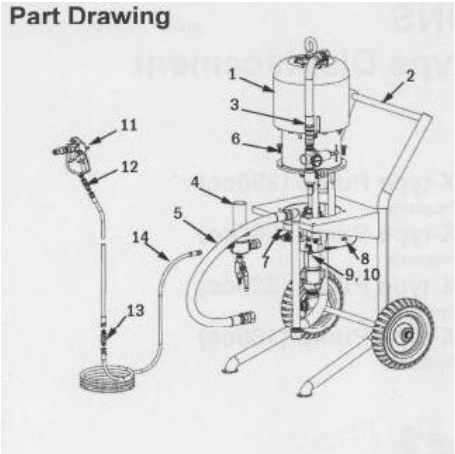

NO	コード番号	品目名	部品番号	個数
1		ポンプ	XXXX-100	1
2		台車	K254-200	1
3		ｴｱｰﾚｷﾞｭﾚｰﾀｰASSY	K254-300	1
4		ラインフィルター	K254-400	1
5	451865	サクションホースASSY	K254-600	1

S254-400 部品分解図

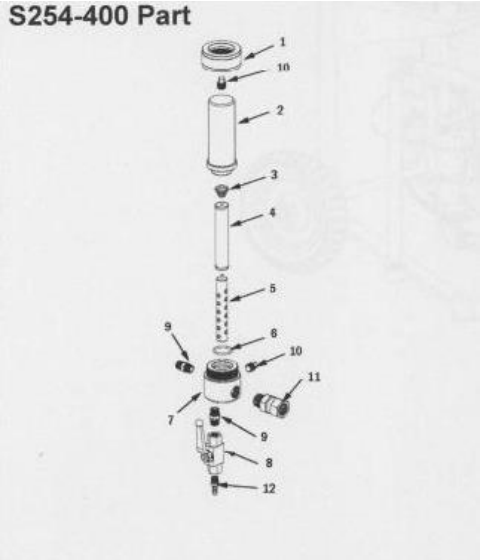

NO	コード番号	品目名	部品番号	個数
1		リング	S254-101	1
2		本体	S254-102	1
3		ｽﾌﾟﾘﾝｸﾞ	S254-103	1
4	451810	フィルター	S254-104	1
5		サポート	S254-105	1
6		Oﾘﾝｸﾞ	S254-106	1
7		ハウジング	S254-107	1
8	451812	ボールバルブ	S254-108	1
9		ジョイント	S254-109	2
10		プラグ	S254-110	2
11		ジョイント	S254-111	1
12		ニップル	S254-112	1

K254-300 部品

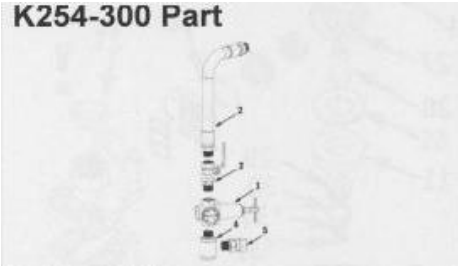

NO	コード番号	品目名	部品番号	個数
1		エアーレギュレター	K254-301	1
2		エアーホース	K254-302	1
3		バルブ	K254-303	1
4		マニホールド	K254-304	1
5		ジョイント	K254-305	1

K254-600 部品

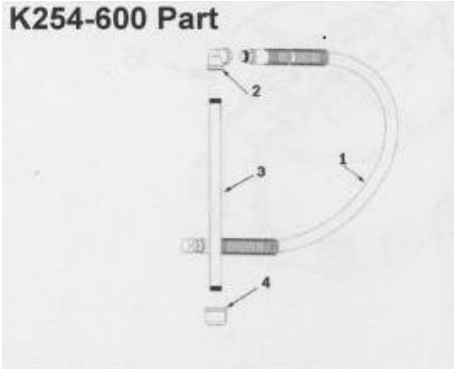

NO	コード番号	品目名	部品番号	個数
1		サクションホース	K254-601	1
2		エルボー	K254-602	1
3		サクションパイプ	K254-603	1
4	451826	ストレーナー（TP1545new）	K254-604	1

X451-100　部品（TP-1545new）

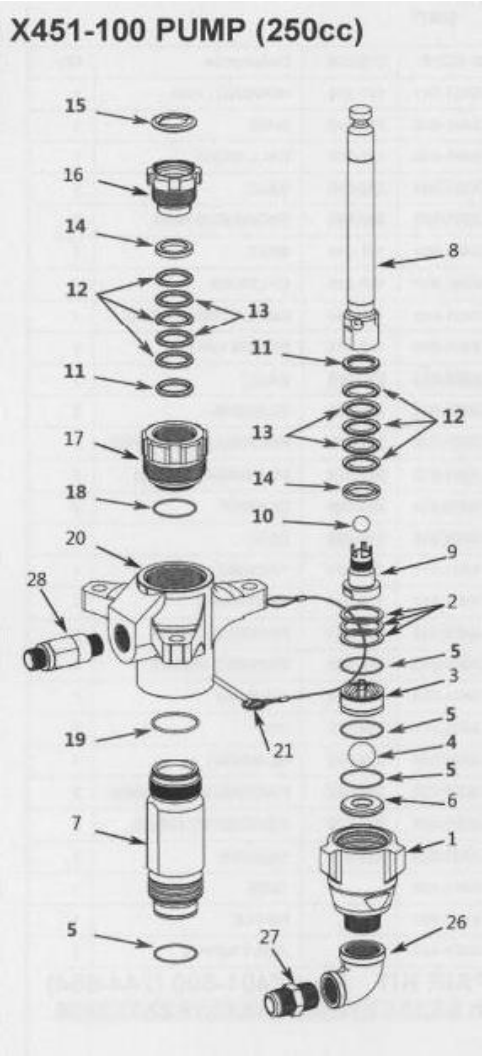

NO	コード番号	品目名	部品番号	個数
1		吸入ホルダー	X451-001	1
2		シム	X451-002	3
3		ボールガイド	X451-003	1
4	ﾘﾍﾟｱｷｯﾄ	ボール	X451-004	1
5	451818	Oリング	X451-005	4
6		シート	X451-006	1
7		シリンダー	X451-007	1
8		ピストンロッド	X451-008	1
9		吐出弁	X451-009	1
10	ﾘﾍﾟｱｷｯﾄ	ボール	X451-010	1
11	ﾘﾍﾟｱｷｯﾄ	グランドM	X451-011	2
12	ﾘﾍﾟｱｷｯﾄ	パッキン（UHMWPE）	X451-012	6
13	ﾘﾍﾟｱｷｯﾄ	パッキン（皮）	X451-013	4
14	ﾘﾍﾟｱｷｯﾄ	グランドF	X451-014	2
15	ﾘﾍﾟｱｷｯﾄ	シール	X451-015	1
16		パッキンナット	X451-016	1
17		カートリッジ	X451-017	1
18	ﾘﾍﾟｱｷｯﾄ	Oリング	X451-018	1
19	451819	Oリング	X451-019	1
20		ハウジング	X451-020	1
21		ピン	X451-021	1
26		エルボ	X451-026	1
27		ジョイント	X451-027	1
28		ジョイント	X451-028	1

451815　リペアKIT No X451-500 に含まれる部品
Part No 4, 5, 10,11,12,13,14,15,18,19

X561-100　部品（TP-1356new）

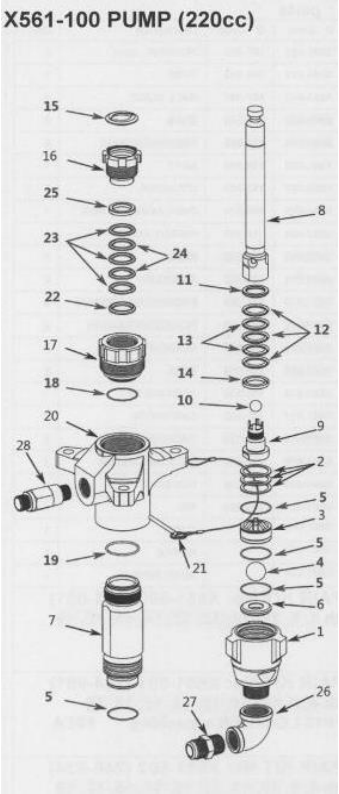

NO	コード番号	品目名	部品番号	個数
1		吸入ホルダー	X561-001	1
2		シム	X561-002	3
3		ボールガイド	X561-003	1
4	ﾘﾍﾟｱｷｯﾄ	ボール	X561-004	1
5	451820	Oリング	X561-005	4
6		シート	X561-006	1
7		シリンダー	X561-007	1
8		ピストンロッド	X561-008	1
9		吐出弁	X561-009	1
10	ﾘﾍﾟｱｷｯﾄ	ボール	X561-010	1
11	ﾘﾍﾟｱｷｯﾄ	グランドM	X561-011	1
12	ﾘﾍﾟｱｷｯﾄ	パッキン（UHMWPE）	X561-012	3
13	ﾘﾍﾟｱｷｯﾄ	パッキン（皮）	X561-013	2
14	ﾘﾍﾟｱｷｯﾄ	グランドF	X561-014	1
15	ﾘﾍﾟｱｷｯﾄ	シール	X561-015	1
16		パッキンナット	X561-016	1
17		カートリッジ	X561-017	1
18	ﾘﾍﾟｱｷｯﾄ	Oリング	X561-018	1
19	451821	Oリング	X561-019	1
20		ハウジング	X561-020	1
21		ピン	X561-021	1
22	ﾘﾍﾟｱｷｯﾄ	グランドM	X561-022	1
23	ﾘﾍﾟｱｷｯﾄ	パッキン（UHMWPE）	X561-023	3
24	ﾘﾍﾟｱｷｯﾄ	パッキン（皮）	X561-024	2
25	ﾘﾍﾟｱｷｯﾄ	グランドF	X561-025	1
26		エルボ	X561-026	1
27		ジョイント	X561-027	1
28		ジョイント	X561-028	1

451816　リペアKIT No X561-500 に含まれる部品
Part No 4, 5, 10,11,12,13,14,15,18,19,22,23,24,25

X681-100　部品（TP-1168new）

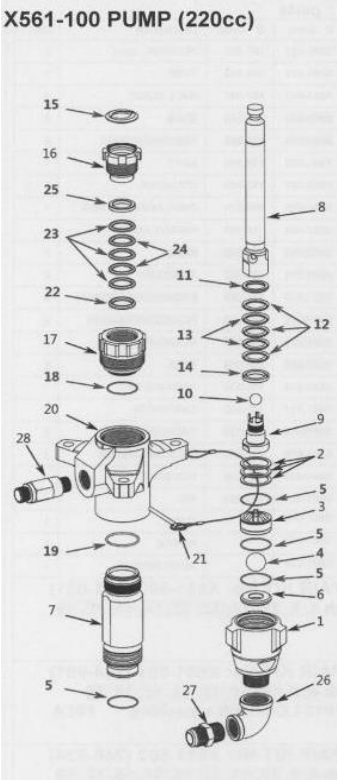

NO	コード番号	品目名	部品番号	個数
1		吸入ホルダー	X681-001	1
2		シム	X681-002	3
3		ボールガイド	X681-003	1
4	ﾘﾍﾟｱｷｯﾄ	ボール	X681-004	1
5	451822	Oリング	X681-005	4
6		シート	X681-006	1
7		シリンダー	X681-007	1
8		ピストンロッド	X681-008	1
9		吐出弁	X681-009	1
10	ﾘﾍﾟｱｷｯﾄ	ボール	X681-010	1
11	ﾘﾍﾟｱｷｯﾄ	グランドM	X681-011	1
12	ﾘﾍﾟｱｷｯﾄ	パッキン（UHMWPE）	X681-012	3
13	ﾘﾍﾟｱｷｯﾄ	パッキン（皮）	X681-013	2
14	ﾘﾍﾟｱｷｯﾄ	グランドF	X681-014	1
15	ﾘﾍﾟｱｷｯﾄ	シール	X681-015	1
16		パッキンナット	X681-016	1
17		カートリッジ	X681-017	1
18	ﾘﾍﾟｱｷｯﾄ	Oリング	X681-018	1
19	451823	Oリング	X681-019	1
20		ハウジング	X681-020	1
21		ピン	X681-021	1
26		エルボ	X681-026	1
27		ジョイント	X681-027	1
28		ジョイント	X681-028	1

451817　リペアKIT No X681-500 に含まれる部品
Part No 4, 5, 10,11,12,13,14,15,18,19,

REPAIR INSTRUCTIONS

2011.07.29 REV11

K- type Air Motor & X- type Displacement Sprayer

Part No. K254-X401, 40:1 Ratio X-type Pump (290cc)
4060 psi (280 bar) Maximum Fluid Working Pressure

Part No. K254-X451, 45:1 Ratio X-type Pump (250cc)
4500 psi (310 bar) Maximum Fluid Working Pressure

Part No. K254-X561, 56:1 Ratio X-type Pump (220cc)
5600 psi (386 bar) Maximum Fluid Working Pressure

Part No. K254-X681, 68:1 Ratio X-type Pump (180cc)
6800 psi (468 bar) Maximum Fluid Working Pressure

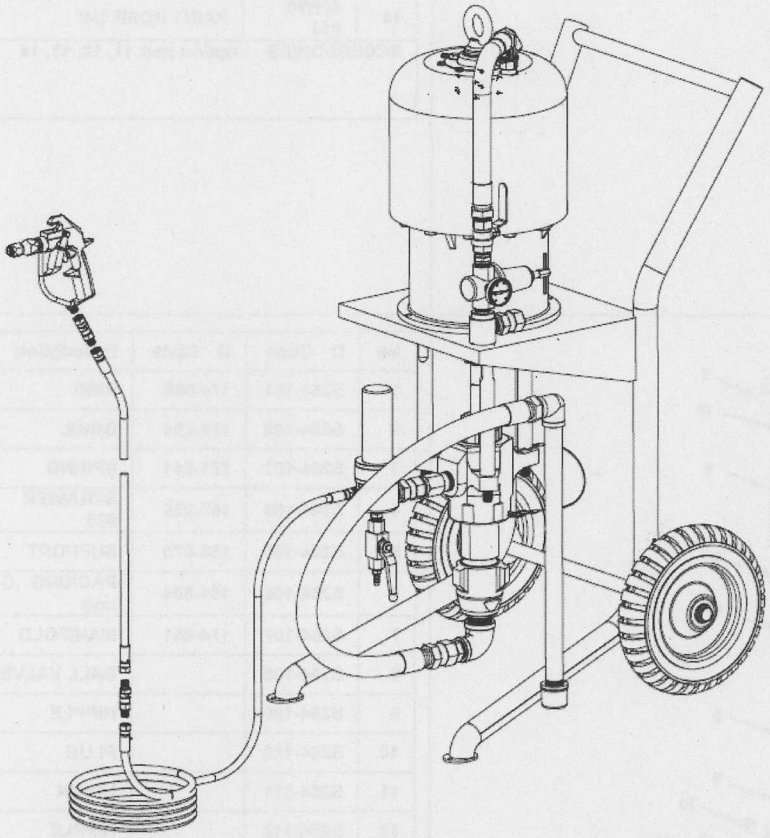

Part Drawing

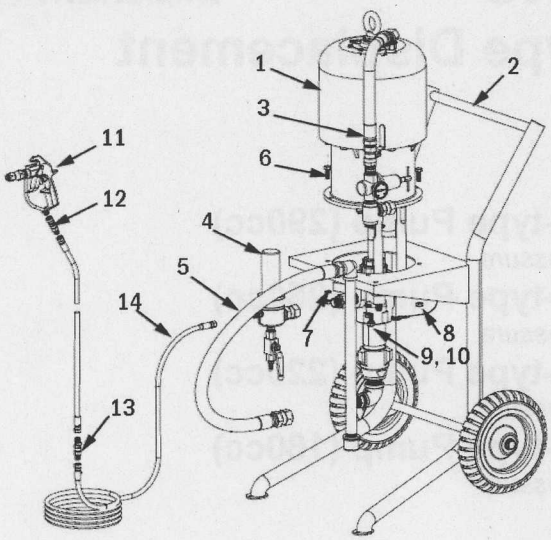

NO	D PART	DESCRIPTION	QTY
1	Xxxx-100	PUMP	1
2	K254-200	CART	1
3	K254-300	AIR REGULATOR KIT	1
4	S254-400	FLUID FILTER	1
5	K254-600	SUCTION HOSE ASS'Y	1
6	K254-111	BOLT	4
7	K254-112	WASHER	4
8	K254-113	NUT	4
9	K254-114	BOLT	1
10	K254-115	WASHER	1
11	G830-000	SPRAY GUN	1
12	ASG1-001	GUN SWIVEL	1
13	ASH1-001	HOSE SWIVEL	
14	AHW0-014	PAINT HOSE 1/4"	

ACCESSORIES : option part 11, 12, 13, 14

S254-400 Part

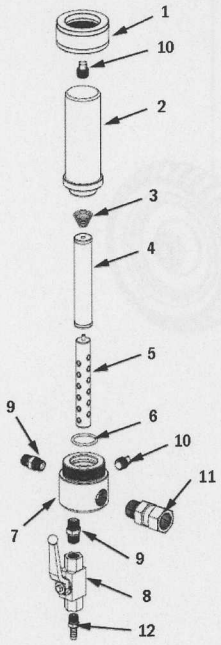

No	D Code	G Code	Description	Qty
1	S254-101	174-058	RING	1
2	S254-102	174-054	BOWL	1
3	S254-103	171-841	SPRING	1
4	S254-104	167-025	STRAINER #60	1
5	S254-105	186-075	SUPPORT	1
6	S254-106	104-804	PACKING ,O-ring	1
7	S254-107	174-061	MANIFOLD	1
8	S254-108		BALL VALVE	1
9	S254-109		NIPPLE	2
10	S254-110		PLUG	2
11	S254-111		UNION	1
12	S254-112		NIPPLE	1

pump part drawing

Xxxx-100

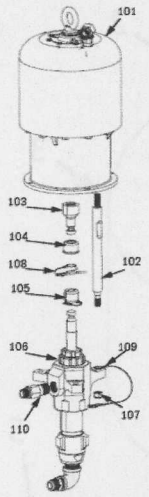

No	D Part No	G Part No	Description	Qty
101	K254-100		AIR MOTOR	1
102	K254-101	197-329	ROD, Tie	3
103	K254-102	197341	ADAPTER	1
104	K254-103	197340	COVER	1
105	K254-104	244819	COUPLING Assembly	1
106	Xxxx-100		PUMP Displacement	1
107	K254-105	101712	NUT	3
108	K254-106	244-820	CLIP	1

K254-200 Part

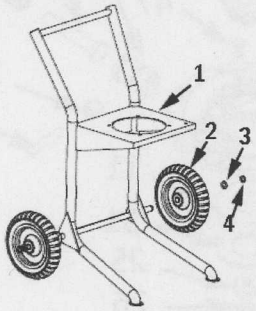

No	D Part	Description	Qty
1	K254-201	CART	1
2	K254-202	TIRE	2
3	K254-203	WASHER	2
4	K254-204	SNAP RING	2

K254-300 Part

No	D Part	Description	Qty
1	K254-301	AIR REGULATOR	1
2	K254-302	AIR HOSE	1
3	K254-303	SHOUTOFF VALVE	1
4	K254-304	AIR MANIFOLD	1
5	K254-305	COUPLING	1

K254-600 Part

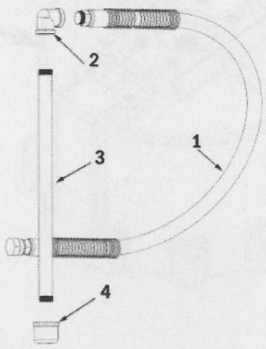

No	D Part	Description	Qty
1	K254-601	SUCTION HOSE	1
2	K254-602	ELBOW	1
3	K254-603	SUCTION TUBE	1
4	K254-604	STRAINER	1

K254-100 Parts

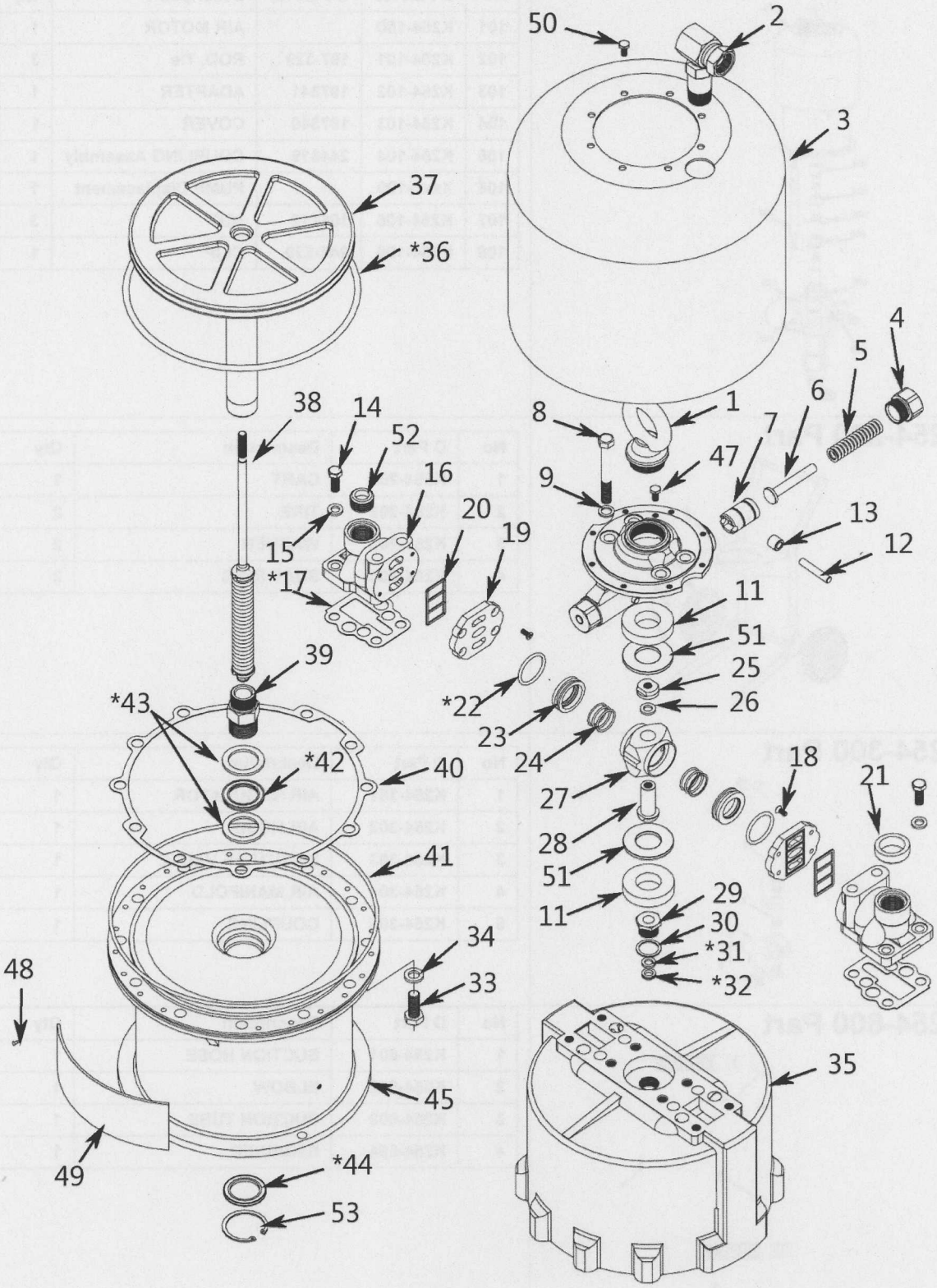

Parts

No	Part No	G Part No	Description	Qty	No	D Part No	G Part No	Description	Qty
1	K254-001	180-952	Lift RING	1	27	K254-027	161-585	Valve HOUSING	1
2	K254-002	207-648	Adapter UNION	1	28	K254-028		HUB	1
3	K254-003	168-188	Motor SHIELD	1	29	K254-029		BEARING, trip rod	1
4	K254-004	161-587	RETAINER	2	30	K254-030	150-647	GASKET	1
5	K254-005	161-589	Compression SPRING	2	31	K254-031	161-559	Backup WASHER	1
6	K254-006	161-588	GUIDE	2	32	K254-032	161-560	V- PACKING	1
7	K254-007	169-583	PLUNGER	2	33	K254-033	100-424	Hex SCREW	12
8	K254-008	101-713	SCREW	4	34	K254-034		WASHER	12
9	K254-009	100-052	Lock WASHER	4	35	K254-035	168-191	Motor CYLINDER	1
10	K254-010	177-664	HOUSING, detent	1	36	K254-036	102-727	Piston O-RING	1
11	K254-011	161-577	PAD Rubber	2	37	K254-037	245-114	PISTON , Ass'y	1
12	K254-012	169-586	AXLE	2	38	K254-038		TRIP ROD , Ass'y	1
13	K254-013	169-585	ROLLER	2	39	K254-039		STUD	1
14	K254-014	100-101	SCREW	4	40	K254-040	168-189	Motor GASKET	1
15	K254-015	100-133	WASHER	4	41	K254-041	102-737	Packing O-RING	1
16	K254-016	168-187	Air MANIFOLD	2	42	K254-042	161-562	Vee PACKING	1
17	K254-017	168-183	Manifold GASKET	2	43	K254-043	161-563	Backup WASHER	2
18	K254-018	101-716	SCREW	8	44	K254-044	161-569	Wiper SEAL	1
19	K254-019	169-584	Valve PLATE	2	45	K254-045	245-115	BASE	1
20	K254-020	168-184	Plate SEAL	2	47	K254-047		SCREW	1
21	K254-021	168-185	GROMMET	1	48	K254-048		SCREW	8
22	K254-022	156-698	O-RING	2	49	K254-049		Name PLATE	2
23	K254-023	168-182	Air VALVE	2	50	K254-050	131-161	SCREW	8
24	K254-024	161-575	Compression SPRING	2	51	K254-051	161-576	Thrust WASHER	2
25	K254-025		NUT, Trip rod	1	52	K254-052	102-726	PLUG	1
26	K254-026	105-319	Lock WASHER	1					

Note : part marked in color are the spare parts

PART NO 17, 22, 30, 31, 32, 36, 42, 43,
Included in Repair KIT No K254-500 (207-730)

Warnings

The following warnings are for the setup, use, grounding, maintenance, and repair of this equipment. The exclamation point symbol alerts you to a general warning and the hazard symbol refers to procedure-specific risk. Refer back to these warnings. Additional, product-specific warnings may be found throughout the body of this manual where applicable.

⚠ WARNING

FIRE AND EXPLOSION HAZARD

Flammable fumes, such as solvent and paint fumes, in **work area** can ignite or explode. To help prevent fire and explosion:

- Use equipment only in well ventilated area.
- Eliminate all ignition sources; such as pilot lights, cigarettes, portable electric lamps, and plastic drop cloths (potential static arc).
- Keep work area free of debris, including solvent, rags and gasoline.
- Do not plug or unplug power cords, or turn power or light switches on or off when flammable fumes are present.
- Ground all equipment in the work area. See **Grounding** instructions.
- Use only grounded hoses.
- Hold gun firmly to side of grounded pail when triggering into pail.
- If there is static sparking or you feel a shock, **stop operation immediately.** Do not use equipment until you identify and correct the problem.
- Keep a working fire extinguisher in the work area.

SKIN INJECTION HAZARD

High-pressure fluid from gun, hose leaks, or ruptured components will pierce skin.

This may look like just a cut, but it is a serious injury that can result in amputation.

Get immediate surgical treatment.

- Do not point gun at anyone or at any part of the body.
- Do not put your hand over the spray tip.
- Do not stop or deflect leaks with your hand, body, glove, or rag.
- Do not spray without tip guard and trigger guard installed.
- Engage trigger lock when not spraying.
- Follow **Pressure Relief Procedure** in manual 311164, when you stop spraying and before cleaning, checking, or servicing equipment

⚠ WARNING

EQUIPMENT MISUSE HAZARD

Misuse can cause death or serious injury.

• Do not operate the unit when fatigued or under the influence of drugs or alcohol.

• Do not exceed the maximum working pressure or temperature rating of the lowest rated system component. See **Technical Data** in all equipment manuals.

• Use fluids and solvents that are compatible with equipment wetted parts. See **Technical Data** in all equipment manuals. Read fluid and solvent manufacturer's warnings. For complete information about your material, request MSDS forms from distributor or retailer.

• Check equipment daily. Repair or replace worn or damaged parts immediately with genuine manufacturer's replacement parts only.

• Do not alter or modify equipment.

• Use equipment only for its intended purpose. Call your distributor for information.

• Route hoses and cables away from traffic areas, sharp edges, moving parts, and hot surfaces.

• Do not kink or over bend hoses or use hoses to pull equipment.

• Keep children and animals away from work area.

• Comply with all applicable safety regulations.

MOVING PARTS HAZARD

Moving parts can pinch or amputate fingers and other body parts.

• Keep clear of moving parts.

• Do not operate equipment with protective guards or covers removed.

• Pressurized equipment can start without warning. Before checking, moving, or servicing equipment, follow the **Pressure Relief Procedure** in manual Disconnect power or air supply.

TOXIC FLUID OR FUMES HAZARD

Toxic fluids or fumes can cause serious injury or death if splashed in the eyes or on skin, inhaled, or swallowed.

• Read MSDS's to know the specific hazards of the fluids you are using.

• Store hazardous fluid in approved containers, and dispose of it according to applicable
guidelines.

• Always wear impervious gloves when spraying or cleaning equipment

PERSONAL PROTECTIVE EQUIPMENT

You must wear appropriate protective equipment when operating, servicing, or when in the operating area of the equipment to help protect you from serious injury, including eye injury, inhalation of toxic fumes, burns, and hearing loss. This equipment includes but is not limited to:

• Protective eyewear

• Clothing and respirator as recommended by the fluid and solvent manufacturer

• Gloves

• Hearing protection

Repair

Required Tools

- Set of adjustable wrenches
- Torque wrench
- Rubber mallet
- Arbor press
- Soft wooden block (approx. 1 square ft in size)
- Large vise with soft jaws
- Thread lubricant
- Petroleum jelly
- Anti-seize lubricant 222955

Disassembly

Layout all removed parts in sequence to ease
reassembly. Clean all parts with a compatible
solvent and inspect them for wear or damage

Repair kits are available to replace the throat (T) and piston (P) packings, and to replace the o-rings and cylinder seals. For best results, use all new parts in the kit. Kit parts are marked with an asterisk, for example (25*). These kits can also be used to convert the lower to different packing materials. See the Packing Kits sections

1. Relieve pressure. See your Xtreme Packages
2. Disconnect lower from motor as illustrated in your Xtreme Packages Or, if you have a cart mounted system, tip cart up to service lower on cart.
3. For lowers with built-in filters, loosen and remove both top filter cap (20) and bottom filter cap (26). See **Service Built-in Filter**,

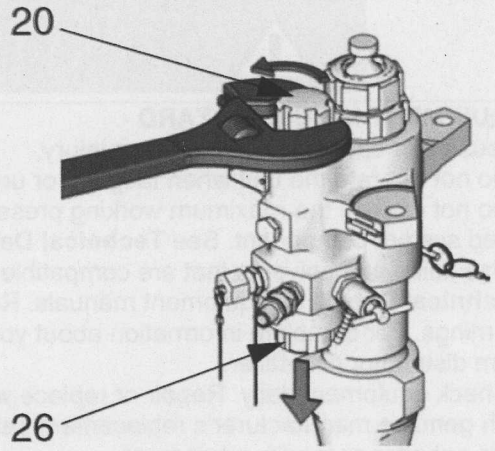

4. Loosen and remove inlet housing (14) from lower cylinder (11).

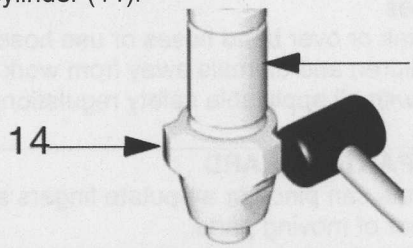

5. Press inlet ball (16) out from bottom of inlet housing (14) (take care not to damage seat (18)) to remove entire inlet ball guide assembly. Remove inlet ball, bottom o-ring (27*), and seat. Then remove remaining o-rings from top and bottom grooves of inlet ball guide (15).

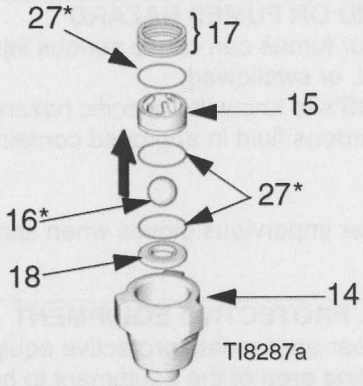

6. Stand lower upright in large vise. Using a rubber mallet, loosen, but do not remove packing nut (2).

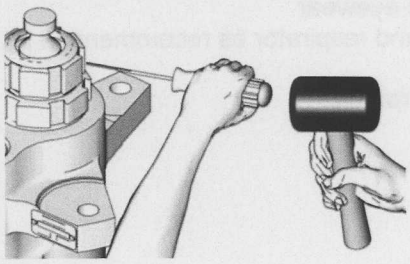

7. Remove locking pin (10) from lower cylinder (11)

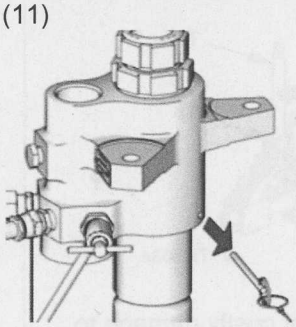

8. Unscrew and lift outlet housing (8) straight up off cylinder. Be careful not to scratch displacement rod (1).

9. Remove cartridge assembly. Remove o-ring (27* or 29*) from bottom of outlet housing (8), and then unscrew packing nut (2) from packing cartridge (7). Remove female gland, male gland, and v-packings (T) from packing cartridge (7).

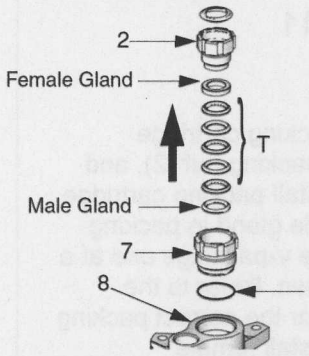

CAUTION

To reduce the possibility of costly damage to displacement rod (1) and lower cylinder (11), first place lower cylinder on a soft block of wood. Always use a rubber mallet or an arbor press to drive the displacement rod out of the lower cylinder. Never use a hammer to drive the rod out. Damage to the rod end will shorten pump life.

10. Stand lower cylinder (11) upright on a wooden block. Using a rubber mallet or an arbor press, drive displacement rod (1) out of the bottom until the piston comes free. Pull the rod and piston from the cylinder, being careful not to scratch the rod or cylinder

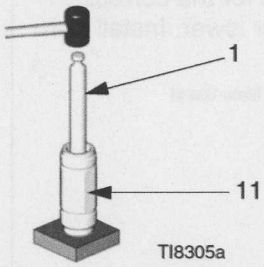

11. Inspect outer surface of displacement rod (1) and inner surface of lower cylinder (11) for scoring or wear; replace if damaged

12. Put flats of piston valve (13) in a vise. Use a wrench to loosen displacement rod (1) from piston valve.

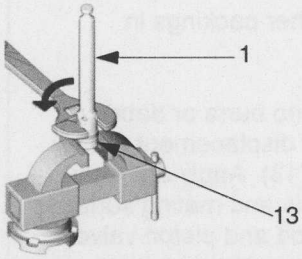

13. Remove displacement rod from piston valve. Be careful that piston ball (12*) does not fall as you separate piston valve and rod.

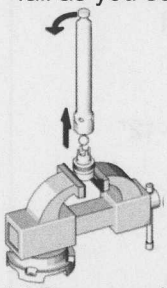

14. Remove glands and v-packings (P) from piston valve (13). Inspect piston ball (12*) and piston valve for wear or damage.

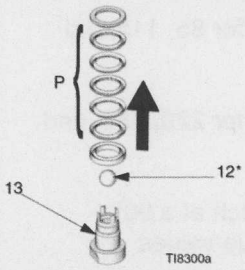

15. Clean all parts with a compatible solvent.

Reassembly

1. Replace female gland on piston valve (13). Install the five v-packings (P) one at a time with lips facing up. Refer to the Packing Kits sections for the correct packing order for your lower. Install the male gland

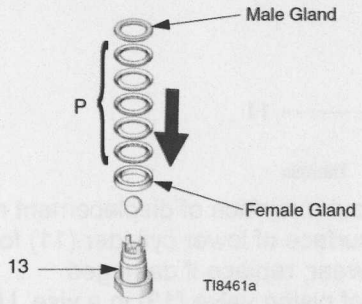

To convert the lower to a different packing material, see the Packing Kits sections

For best results, soak leather packings in oil before reassembly.

2 Ensure there are no burrs or debris on mating threads of displacement rod (1) and piston valve (13). Apply anti-seize lubricant to threads and mating surfaces of displacement rod and piston valve.

3 Place flats of piston valve in a vise. Place piston ball (12*) on piston valve.

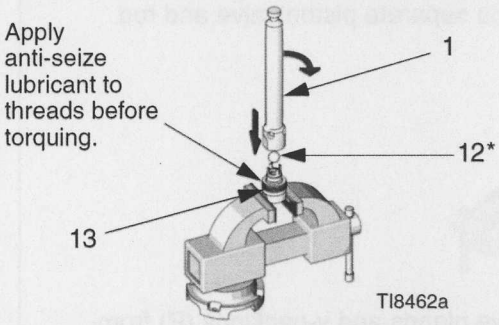

4 Screw displacement rod (1) onto piston valve (13), and hand tight. Then torque to:

- 115-135 ft-lb (155-182 N•m) for 85, 115,and 145 lower sizes; or
- 190-210 ft-lb (258-285 N•m) for 220, 250, and 290 lower sizes.

Orient crowfoot of torque wrench at a 90° angle to ensure accurate torque values

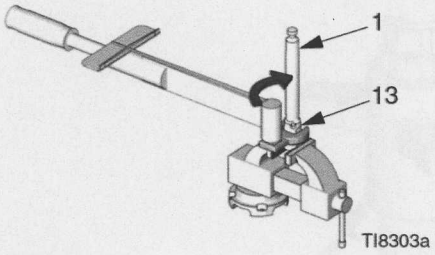

CAUTION

To reduce the possibility of costly damage to displacement rod (1) and lower cylinder (11), first place lower cylinder on a soft block of wood. Always use a rubber mallet or an arbor press to drive the displacement rod into the lower cylinder. Never use a hammer to drive the rod.

5. To reinstall displacement rod (1) into lower cylinder (11), first lubricate piston packings (P). Then, with piston end facing down, lower rod into cylinder. Start piston into cylinder as much as possible, then drive rod and piston the rest of the way into the cylinder with an arbor press or rubber mallet

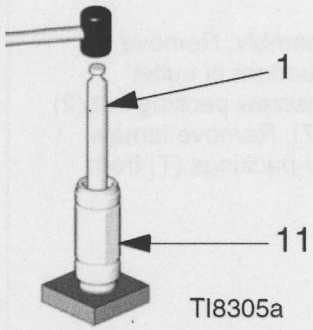

6. Lubricate inside of packing cartridge (7),outside threads of packing nut (2), and throat packings (T). Install packing cartridge into housing. Place male gland in packing cartridge. Install the five v-packings one at a time with lips facing down. Refer to the Packing Kits sections for the correct packing order for your lower. Install female land.Then, reassemble packing nut (2), but do not tighten.

To convert lower to a different packing material, see Packing Kits sections.
For best results, soak leather packings in oil before reassembly.

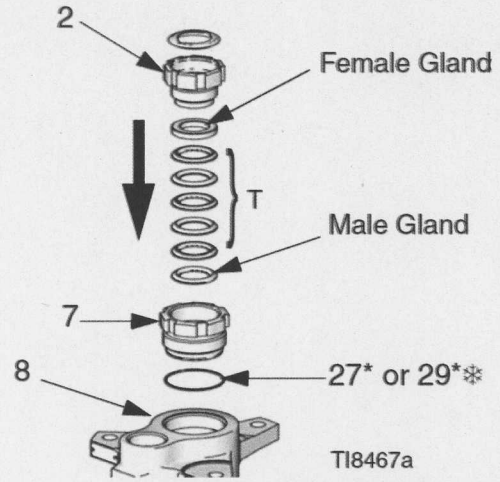

❄ Blue o-ring for 220cc, 250cc, 290cc lowers

7. Screw lower cylinder (11) onto outlet housing (8) until it bottoms out. Use a wrench to tighten lower cylinder. Back off as little as possible until hole in housing lines up with flat on cylinder. Insert locking pin (10) into cylinder.

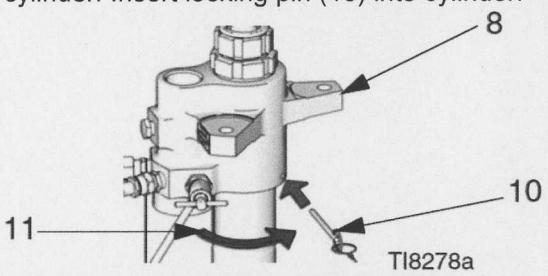

8. Install inlet seat (18), inlet ball (16), and one o-ring (27*) into inlet housing (14).

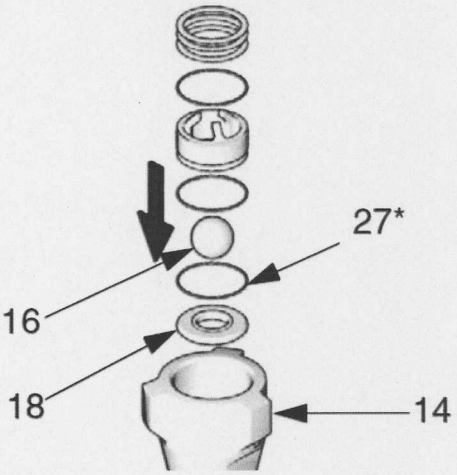

9. Lubricate and install o-rings (27*) in top and bottom grooves of inlet ball guide (15). Press inlet ball guide into inlet housing (14) and install shims (17).

Shims (three maximum) can be assembled either for short ball travel or long ball travel. See illustrations below for an example of each

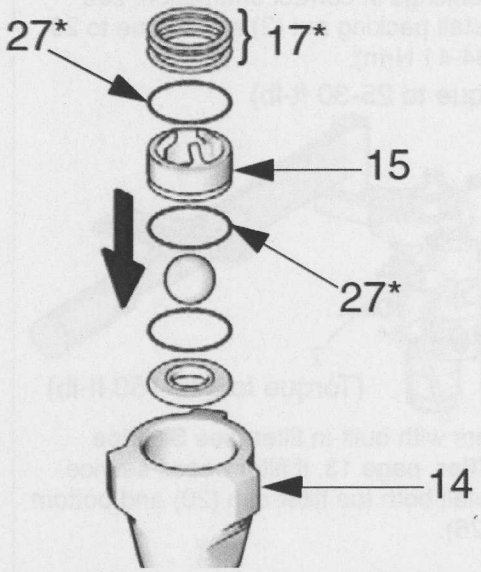

Shortest Ball Travel◆ Longest Ball Travel❖ ✠

◆ Factory set configuration for optimum pump change over.

❖ Shims can be configured to change ball travel length. Use longer ball travel length for higher viscosity fluids

✠ Optional inlet ball spring kit vailable. Use to improve change over rate with longer ball travel configurations. See **Kits**, for more information.

10. Thread inlet housing (14) onto lower cylinder (11). Torque to 140-150 ft-lb (189-203 N•m).

11. Using torque wrench, torque packing cartridge (7) to outlet housing (8). Torque to 140-150 ft-lb (189-203 N•m).

12. Insert packings in correct orientation; see **Parts**, Install packing nut (2) and torque to 25-30 ft-lb (34-41 N•m).

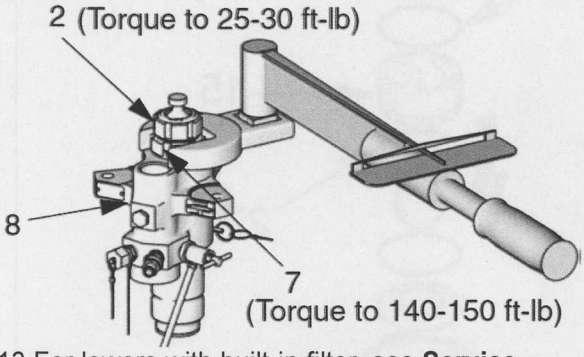

13. For lowers with built-in filter, see **Service Built-in Filter**, page 13, if filter needs service. Then reinstall both top filter cap (20) and bottom filter cap (26).

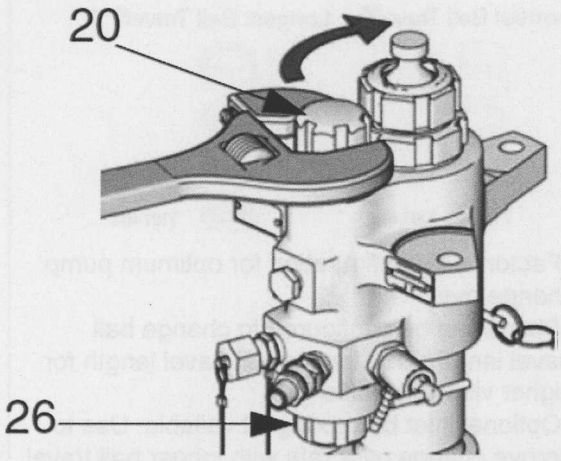

14. Reconnect lower to air motor. See Xtreme

Parts drawing and Parts List

X401-100 PUMP (290cc)

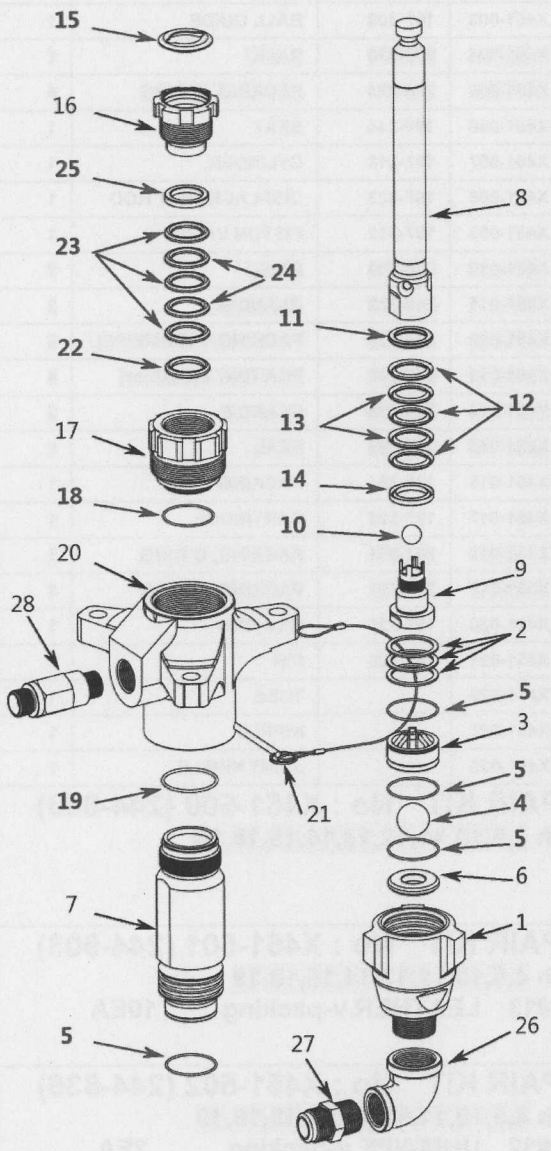

Note : part marked in color are the spare part

No	D CODE	G CODE	Description	Qty
1	X401-001	197-304	HOUSING , Inlet	1
2	X401-002	244-856	SHIM	3
3	X401-003	197-308	BALL GUIDE	1
4	X401-004	253-030	BALL	1
5	X401-005	244-894	PACKING ,O-RING	4
6	X401-006	197-344	SEAT	1
7	X401-007	197-319	CYLINDER	1
8	X401-008	197-324	DISPLACEMENT ROD	1
9	X401-009	197-313	PISTON VALVE	1
10	X401-010	244-899	BALL	1
11	X401-011	244-886	GLAND-M	1
12	X401-012	244-868	PACKING-V (UHMWPE)	3
13	X401-013	244-874	PCAKING-V(Leather)	2
14	X401-014	244-880	GLAND-F	1
15	X401-015	244-999	SEAL	1
16	X401-016	197-331	PACKING NUT	1
17	X401-017	197-327	CARTRIDGE	1
18	X401-018	244-891	PACKING, O-RING	1
19	X401-019	244-893	PACKING, O-RING	1
20	X401-020	197-335	HOUSING	1
21	X401-021	244-826	PIN	1
22	X401-022	244-885	GLAND-M	1
23	X401-023	244-867	PACKING-V (UHMWPE)	3
24	X401-024	244-873	PCAKING-V(Leather)	2
25	X401-025	244-879	GLAND-F	1
26	X401-026		TUBE	1
27	X401-027		NIPPLE	1
28	X401-028		JOINT NIPPLE	1

REPAIR KIT No : X401-500 (244-854)
With 4,5,10,11,12,13,14,15,18,19,22,23,24,25

REPAIR KIT No : X401-501 (244-904)
With 4,5,10,11,13,14,15,18,19,22,24,25
No #13 LEATHER v-packing 5EA
#24 LEATHER v-packing 5EA

Parts drawing and Parts List

X451-100 PUMP (250cc)

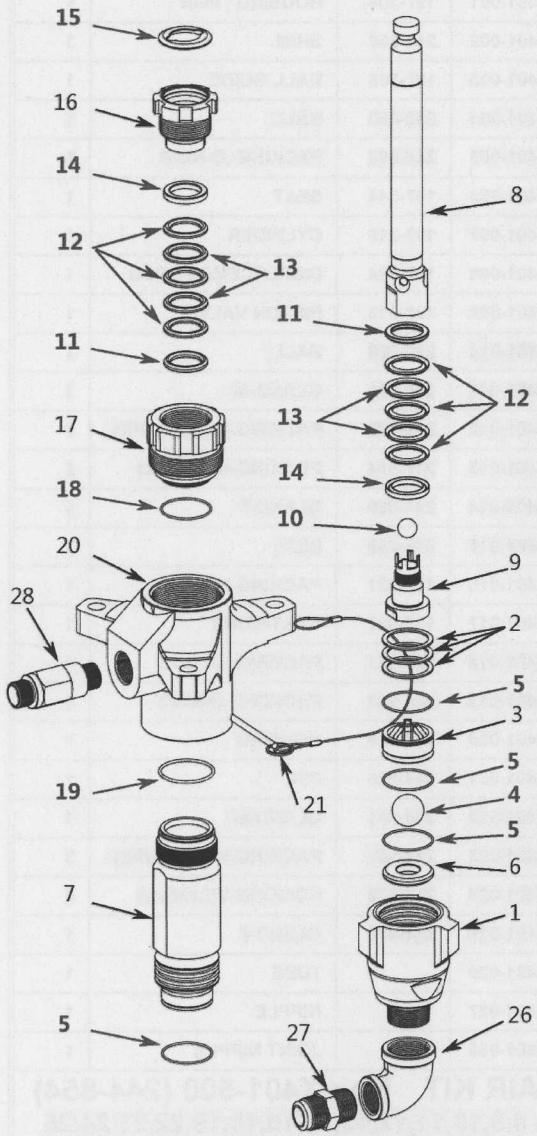

Note : part marked in color are the spare part

No	D CODE	G CODE	Description	Qty
1	X451-001	197-304	HOUSING , Inlet	1
2	X451-002	244-856	SHIM	3
3	X451-003	197-308	BALL GUIDE	1
4	X451-004	253-030	BALL	1
5	X451-005	244-894	PACKING ,O-RING	4
6	X451-006	197-344	SEAT	1
7	X451-007	197-318	CYLINDER	1
8	X451-008	197-323	DISPLACEMENT ROD	1
9	X451-009	197-312	PISTON VALVE	1
10	X451-010	244-898	BALL	1
11	X451-011	245-232	GLAND-M	2
12	X451-012	245-229	PACKING-V (UHMWPE)	6
13	X451-013	245-230	PCAKING-V(Leather)	4
14	X451-014	245-233	GLAND-F	2
15	X451-015	244-999	SEAL	1
16	X451-016	197-331	PACKING NUT	1
17	X451-017	197-328	CARTRIDGE	1
18	X451-018	244-891	PACKING, O-RING	1
19	X451-019	244-893	PACKING, O-RING	1
20	X451-020	197-335	HOUSING	1
21	X451-021	244-826	PIN	1
26	X451-026		TUBE	1
27	X451-027		NIPPLE	1
28	X451-028		JOINT NIPPLE	1

REPAIR KIT No : X451-500 (244-853)
With 4,5,10,11,12,13,14,15,18,19

REPAIR KIT No : X451-501 (244-903)
With 4,5,10,11,13,14,15,18,19
No #13 LEATHER v-packing 10EA

REPAIR KIT No : X451-502 (244-836)
With 4,5,10,11,12,13,14,15,18,19
No #12 UHMWPE v-packing 2EA
#13 LEATHWE v-packing 8EA

Parts drawing and Parts List

X561-100 PUMP (220cc)

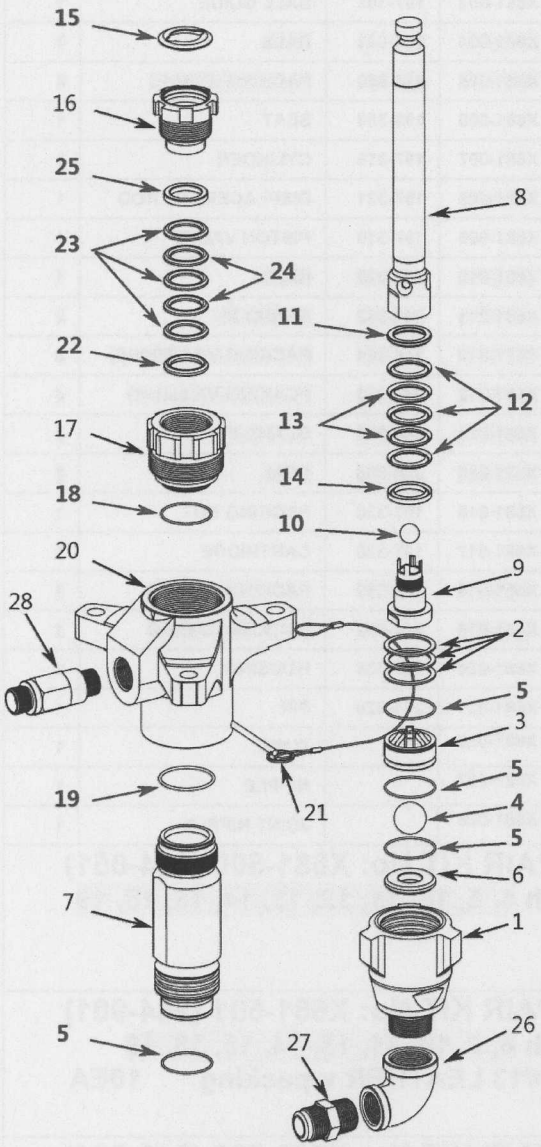

Note : part marked in color are the spare part

No	D CODE	G CODE	Description	Qty
1	X561-001	197-304	HOUSING , Inlet	1
2	X561-002	244-856	SHIM	3
3	X561-003	197-308	BALL GUIDE	1
4	X561-004	253-030	BALL	1
5	X561-005	244-894	PACKING ,O-RING	4
6	X561-006	197-344	SEAT	1
7	X561-007	197-317	CYLINDER	1
8	X561-008	197-322	DISPLACEMENT ROD	1
9	X561-009	197-311	PISTON VALVE	1
10	X561-010	244-898	BALL	1
11	X561-011	244-884	GLAND-M	1
12	X561-012	244-860	PACKING-V (UHMWPE)	3
13	X561-013	244-872	PCAKING-V(Leather)	2
14	X561-014	244-878	GLAND-F	1
15	X561-015	244-999	SEAL	1
16	X561-016	197-331	PACKING NUT	1
17	X561-017	197-327	CARTRIDGE	1
18	X561-018	244-891	PACKING, O-RING	1
19	X561-019	244-893	PACKING, O-RING	1
20	X561-020	197-335	HOUSING	1
21	X561-021	244-826	PIN	1
22	X561-022	244-883	GLAND-M	1
23	X561-023	244-859	PACKING-V (UHMWPE)	3
24	X561-024	244-871	PCAKING-V(Leather)	2
25	X561-025	244-877	GLAND-F	1
26	X561-026		TUBE	1
27	X561-027		NIPPLE	1
28	K561-028		JOINT NIPPLE	1

REPAIR KIT No : X561-500 (244-852)
With 4,5,10,11,12,13,14,15,18,19,22,23,24,25

REPAIR KIT No : X561-501 (244-902)
With 4,5,10,11,13,14,15,18,19,22,24,25
No #13 LEATHER v-packing 5EA
#24 LEATHER v-packing 5EA

REPAIR KIT No : X561-502 (246-835)
With 4,5,10,11,12,13,14,15,18,19,22,23,24,25
No #12 UHMWPE v-packing 1EA
#13 LEATHER v-packing 4EA
#23 UHMWPE v-packing 1EA
#24 LEATHER v-packing 4EA

Parts drawing and Parts List

X681-100 PUMP (180cc)

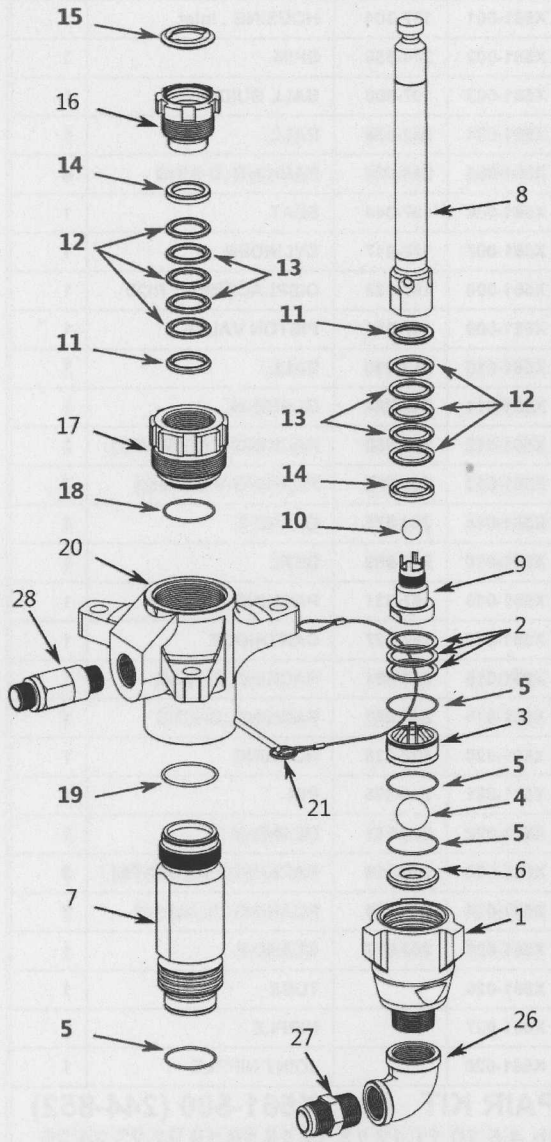

Note : part marked in color are the spare parts

No	D Code	G Code	Description	Qty
1	X681-001	197-303	HOUSING , Inlet	1
2	X681-002	244-855	SHIM	3
3	X681-003	197-307	BALL GUIDE	1
4	X681-004	253-031	BALL	1
5	X681-005	244-890	PACKING ,O-RING	4
6	X681-006	196-358	SEAT	1
7	X681-007	197-316	CYLINDER	1
8	X681-008	197-321	DISPLACEMENT ROD	1
9	X681-009	197-310	PISTON VALVE	1
10	X681-010	253-029	BALL	1
11	X681-011	244-882	GLAND-M	2
12	X681-012	244-864	PACKING-V(UHMWPE)	6
13	X681-013	244-870	PCAKING-V(Leather)	4
14	X681-014	244-876	GLAND-F	2
15	X681-015	244-996	SEAL	1
16	X681-016	197-330	PACKING NUT	1
17	X681-017	197-326	CARTRIDGE	1
18	X681-018	244-890	PACKING, O-RING	1
19	X681-019	244-892	PACKING, O-RING	1
20	X681-020	197-334	HOUSING	1
21	X681-021	244-826	PIN	1
26	X681-026		TUBE	1
27	X681-027		NIPPLE	1
28	X681-028		JOINT NIPPLE	1

REPAIR KIT No: X681-500 (244-851)
With 4, 5, 10, 11, 12, 13, 14, 15, 18, 19

REPAIR KIT No: X681-501 (244-901)
With 4, 5, 10, 11, 13, 14, 15, 18, 19
No #13 LEATHER v-packing 10EA

REPAIR KIT No: X681-502 (246-834)
With 4, 5, 10, 11, 12, 13, 14, 15, 18, 19
No #12 UHMWPE v-packing 2EA
#13 LEATHER v-packing 8EA